VARIEZE

MANUFACTURING MANUAL SECTION III

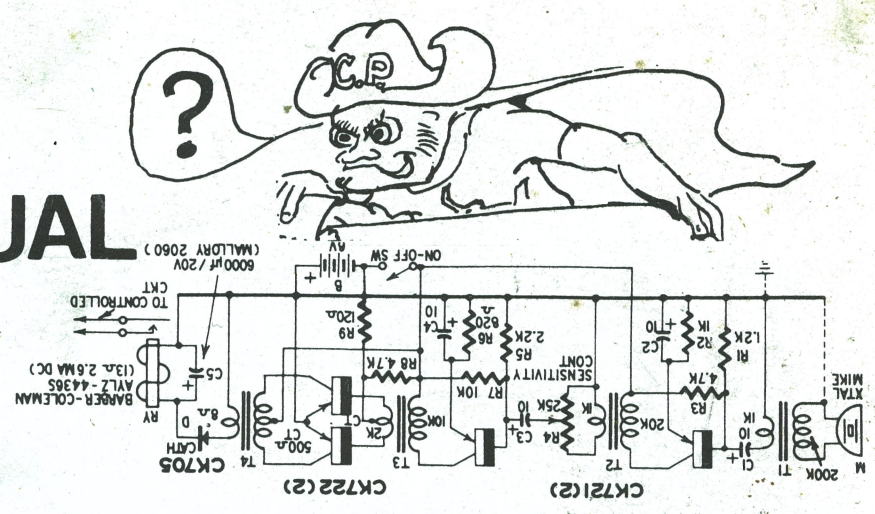

ELECTRICAL SYSTEM

SECTION III OF THE VARIEZE MANUFACTURING MANUAL

This section details the installation of a basic electrical system to operate a NAV COM, engine instruments, fuel pump, 12-volt flight instruments, roll trim servo, landing gear/canopy warning system, and optional strobe light system. It is strongly recommended that the avionics be kept to a minimum. The VariEze is a very small airplane, not as tolerant to weight addition as the average light plane.

The strobe system is effective in improving visibility for day VFR conditions.

The warning system lights a light and sounds a buzzer if the throttle is advanced past 1/4-throttle without the canopy handle locked. The same light and buzzer sounds as a gear warning if the throttle is retarded below 1/4 without the nose gear locked down.

BILL OF MATERIALS

Wire MIL-W- 5086A Type II or eq.
- #20 gauge 35 ft
- #18 gauge 25 ft
- #12 gauge 50 ft
- #10 gauge 35 ft

Ty-Rap nylon straps (for bundling)
- TY-525M 2-inch (25)
- TY-528M 4-inch (25)

Ring tongue solderless terminals
- RA18-8 or RA18-6* (8)
- RC10-8 or RC10-10* (25)

Circuit Breakers manual set/manual trip
- 1 amp (1)
- 2 amp (1)
- 5 amp (3)
- 7 amp (1)
- 25 amp (1)

Switches
- Micro 8A1011 (3)
- Micro 8A2041 (1)
- AN 3022-2 (2)
- Radio Shack #275-1102 (3) or #275-016
- Micro type V3 JV-7 (3) OR
- MICRO TYPE SM JS-2 (3)

Misc.
- Strobe system Whelan 2-lamp system with remote power supply or eq.
- Buzzer Dodge auto part # 3588349463990532
- Light Radio Shack #272-327 with 12 V lamp
- Regulator Radio Shack #276-1770 (RS7805/309k
- Regulator Chrysler auto part # 2098300
- Ammeter Any type with ± 20 to ± 40 amp range
- Battery 10 to 12 AmpHr motorcycle battery
- SILICONE GE OR DOW SEALANT

* terminal size depends on the size of your switches, breakers, etc..

SCHEMATIC VARIEZE BASIC ELECTRICAL SYSTEM

NOTE: #12, #18 etc. denote MIN WIRE SIZES. THIS SYSTEM IS NOT ADEQUATE FOR AN ENGINE STARTER.

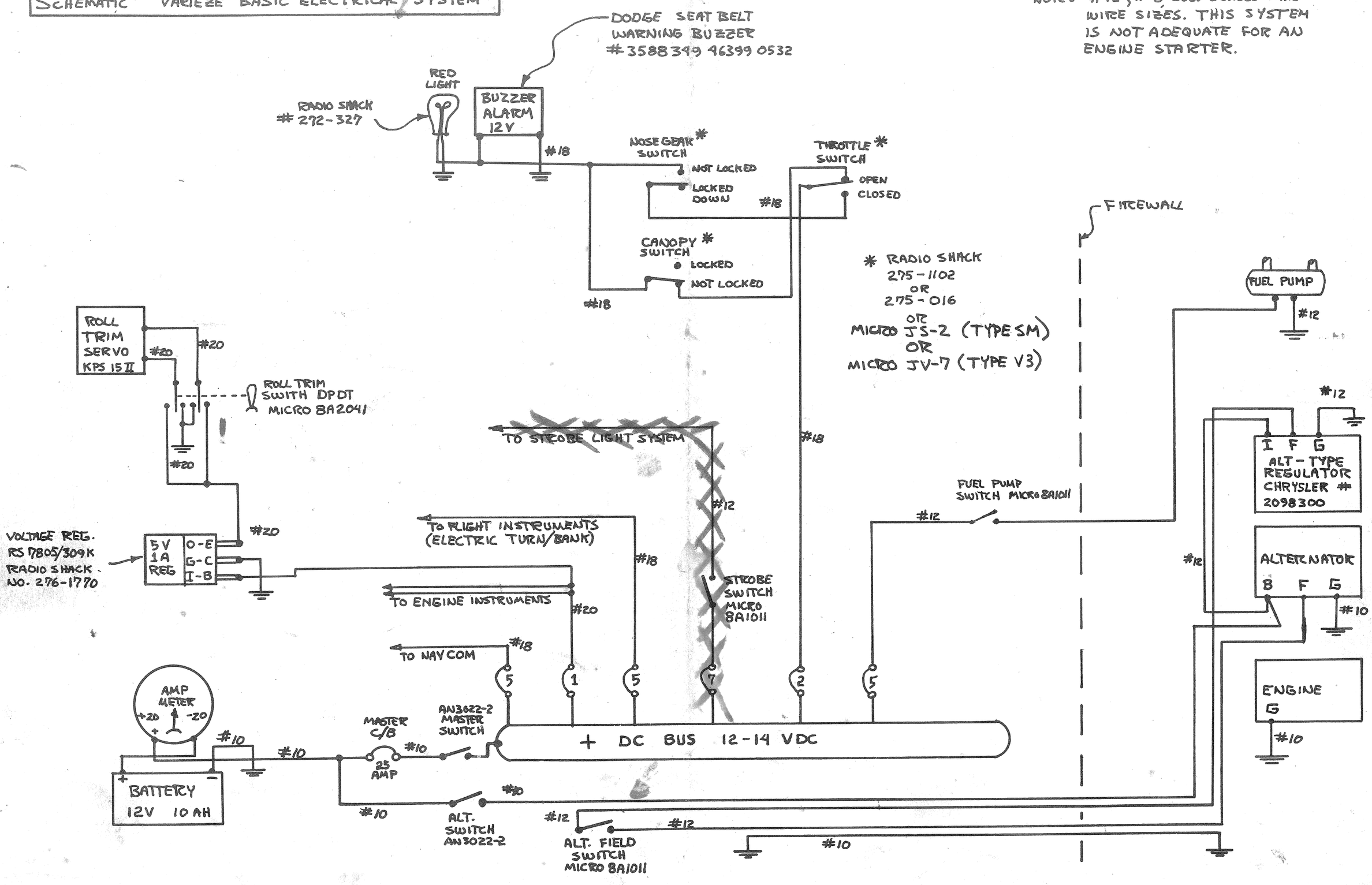

ELECTRICAL SYSTEM GENERAL ARRANGEMENT.

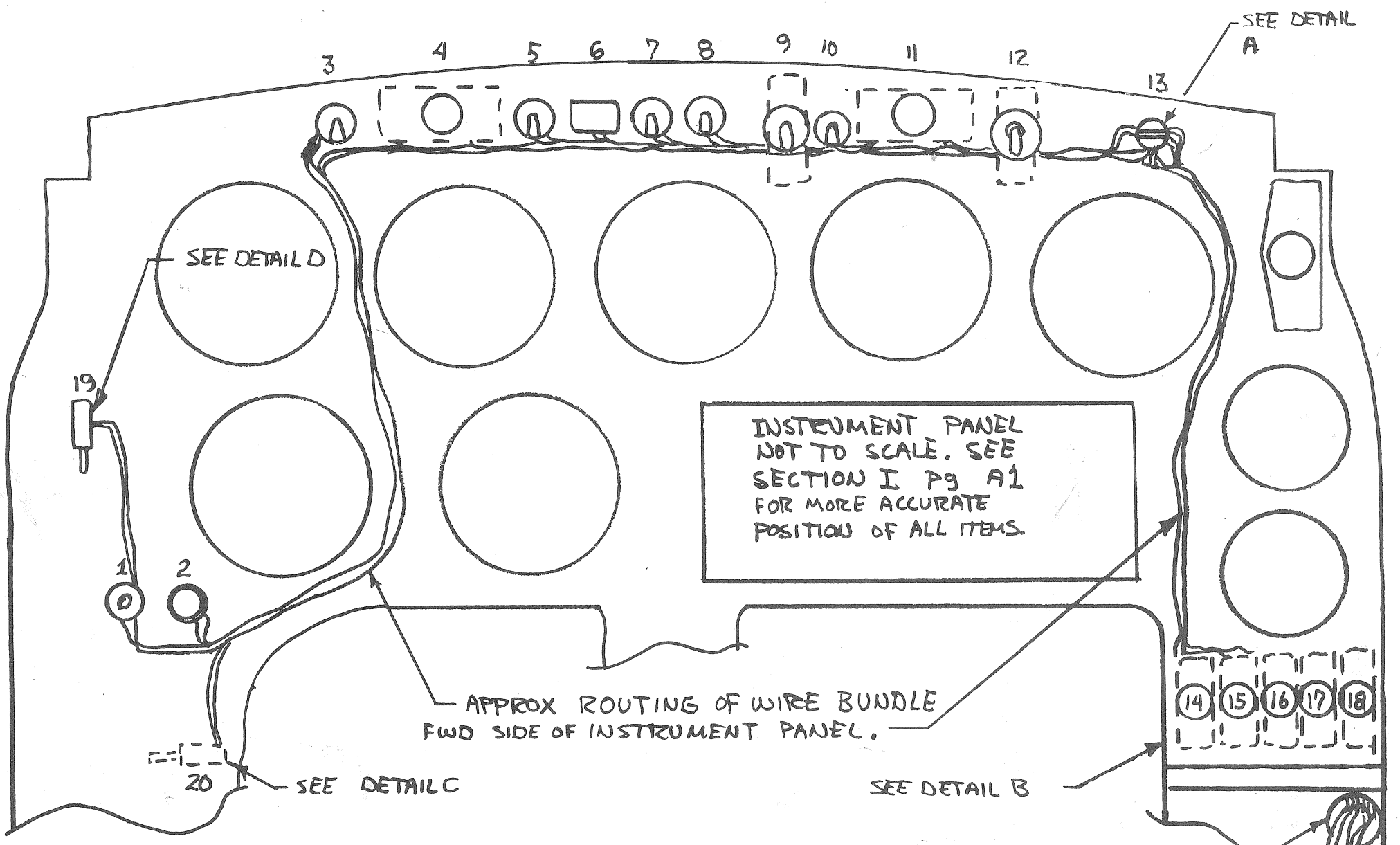

HOLE UNDER ARMREST FOR WIRE BUNDLE. (SEE A2 DRAWING)

DETAIL A
GROUND TERMINAL AT INSTRUMENT PANEL.

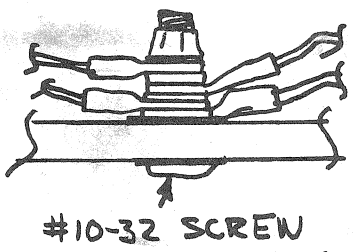

#10-32 SCREW
AN 960 WASHERS
MS 21042-3 NUT

ALL GROUND WIRES CONNECT HERE WITH RING-TONGUE TYPE SOLDERLESS TERMINALS.

S.a. Sect. II-A, p. 4-37

ITEM NO	ITEM See Section I, p. 17-10 for a list of instruments
1	ROLL TRIM SWITCH. MICRO 8A2041
2	MIC SWITCH, PUSH TO TALK. SEE RADIO SCHEMATIC
3	FUEL PUMP SWITCH. MICRO 8A1011
4	FUEL PUMP CIRCUIT BKR 5 AMP
5	~~STROBE SWITCH MICRO 8A1011~~
6	GEAR/CANOPY WARNING LIGHT. RADIO SHACK 272-327
7	LEFT MAGNETO SWITCH - SEE SECTION IIA
8	RIGHT MAGNETO SWITCH - SEE SECTION IIA
9	ALTERNATER SWITCH. AN3022-2
10	ALTERNATER FIELD SWITCH. MICRO 8A1011
11	MASTER CIRCUIT BREAKER 25A
12	MASTER SWITCH. AN3022-2
13	GND TERMINAL. DETAIL A
14	5 AMP C/B NAV COM
15	1 AMP C/B ROLL TRIM/INST
16	5 AMP C/B FLIGHT INST
17	2 AMP C/B WARNING SYSTEM
18	7 AMP C/B STROBES
19	MICRO SWITCH AT CANOPY RADIO SHACK 275-1102
20	MICRO SWITCH AT THROTTLE RADIO SHACK 275-1102

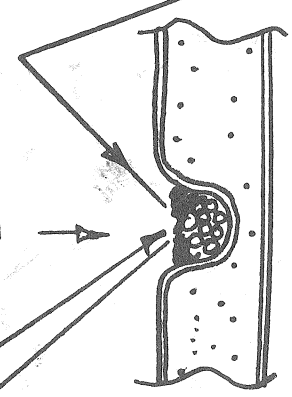

POT WIRE BUNDLE EVERY 6" WITH SILICONE RUBBER.

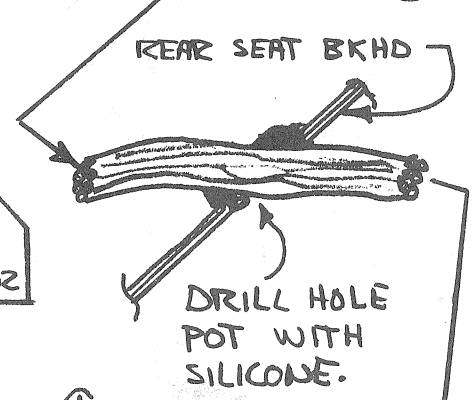

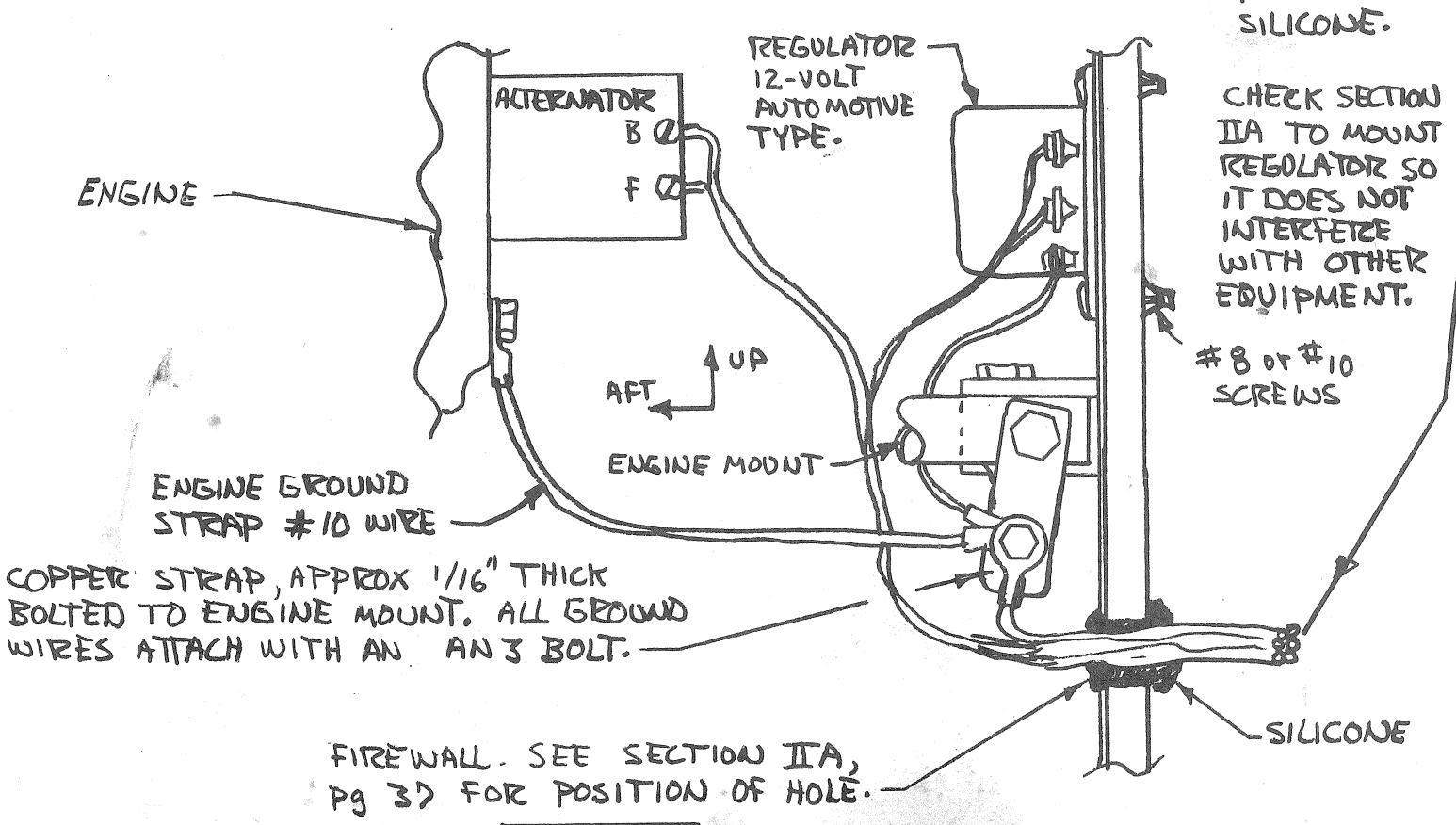

CHECK SECTION IIA TO MOUNT REGULATOR SO IT DOES NOT INTERFERE WITH OTHER EQUIPMENT.

DETAIL B CIRCUIT BREAKER WIRING

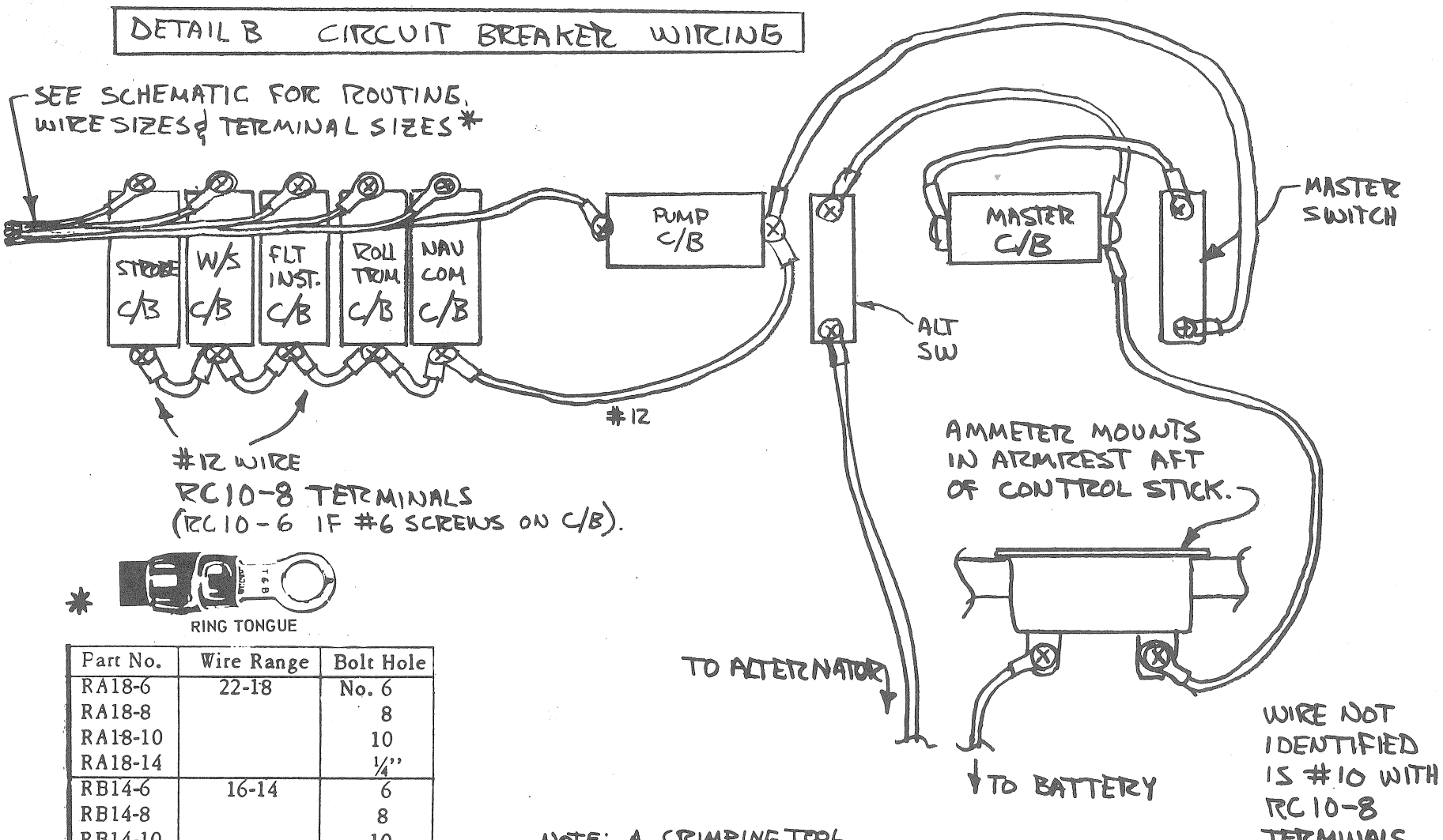

* RING TONGUE

Part No.	Wire Range	Bolt Hole
RA18-6	22-18	No. 6
RA18-8		8
RA18-10		10
RA18-14		¼"
RB14-6	16-14	6
RB14-8		8
RB14-10		10
RB14-14		¼"
RC10-6	12-10	6
RC10-8		8
RC10-10		10
RC10-14		¼"

NOTE: A CRIMPING TOOL IS REQ'D TO INSTALL THE RING TONGUE TERMINALS.

DETAIL C MICRO SWITCH ON THROTTLE

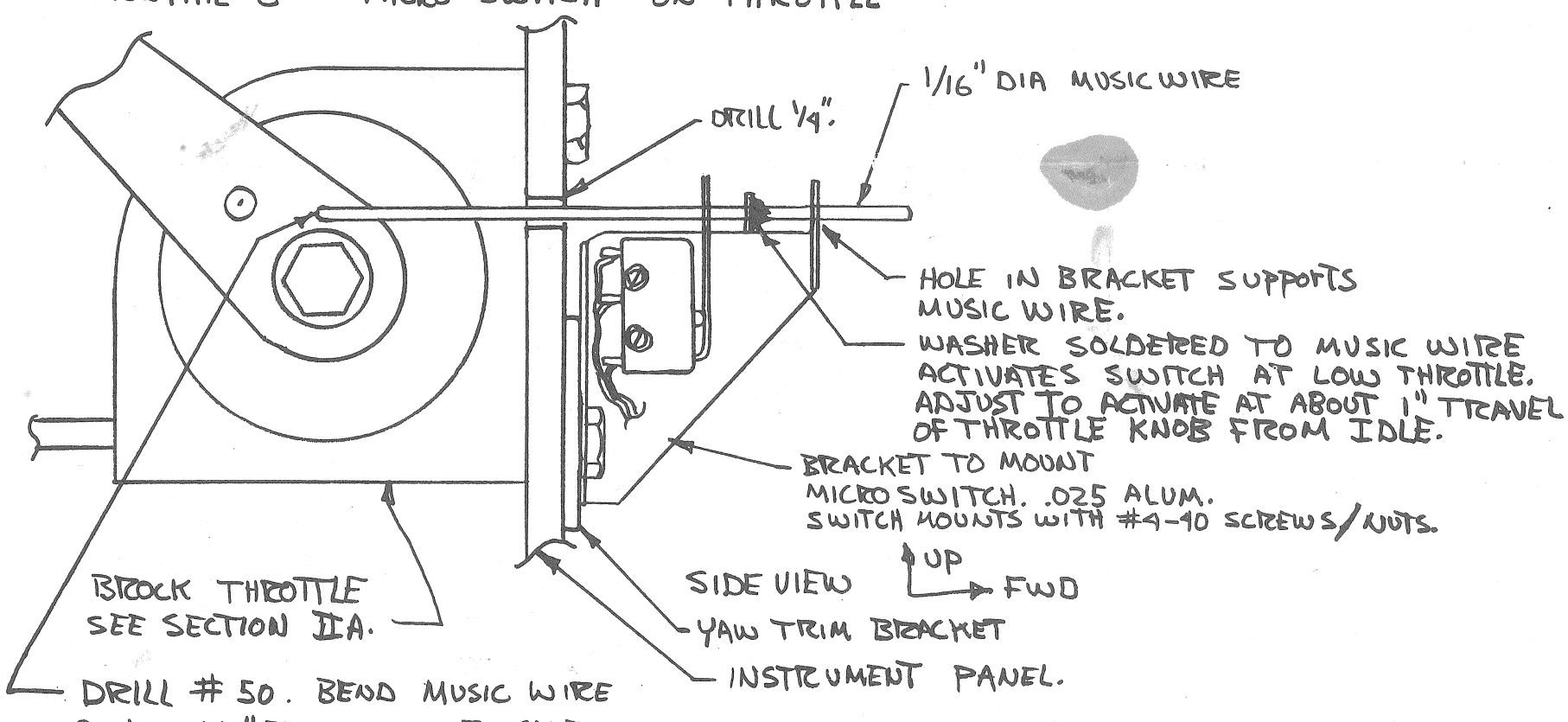

DETAIL D MICRO SWITCH ON CANOPY LOCK

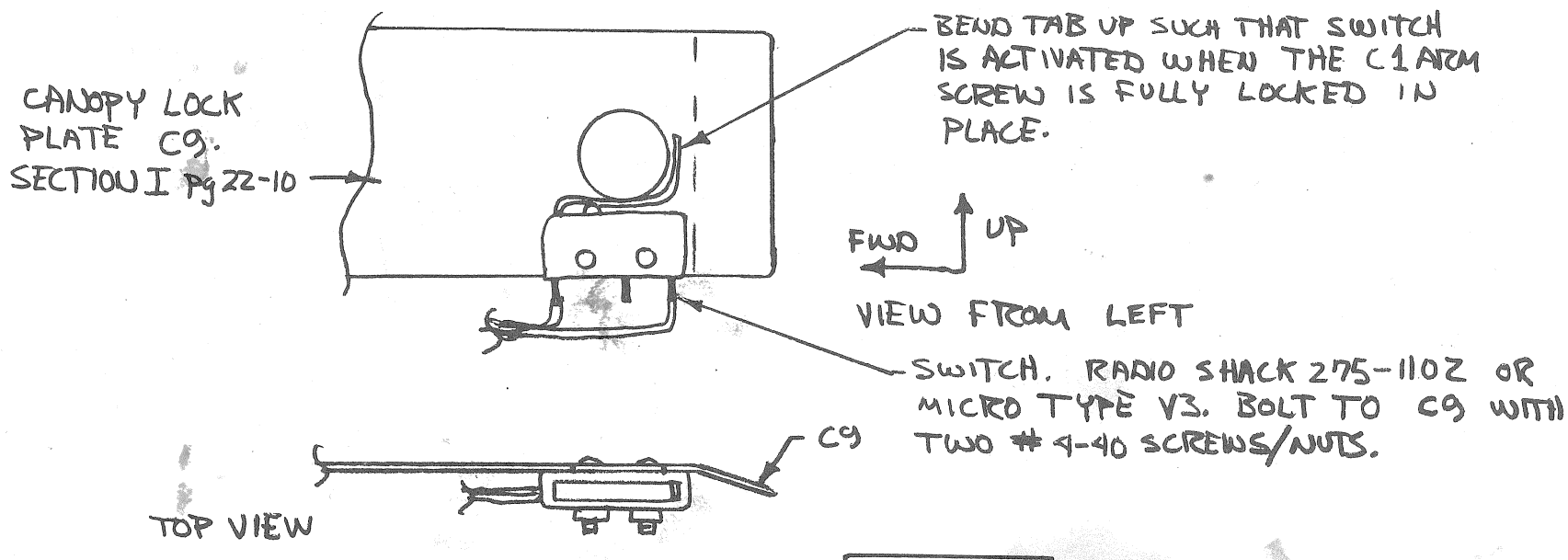

MICROSWITCH MOUNT ON NOSE GEAR

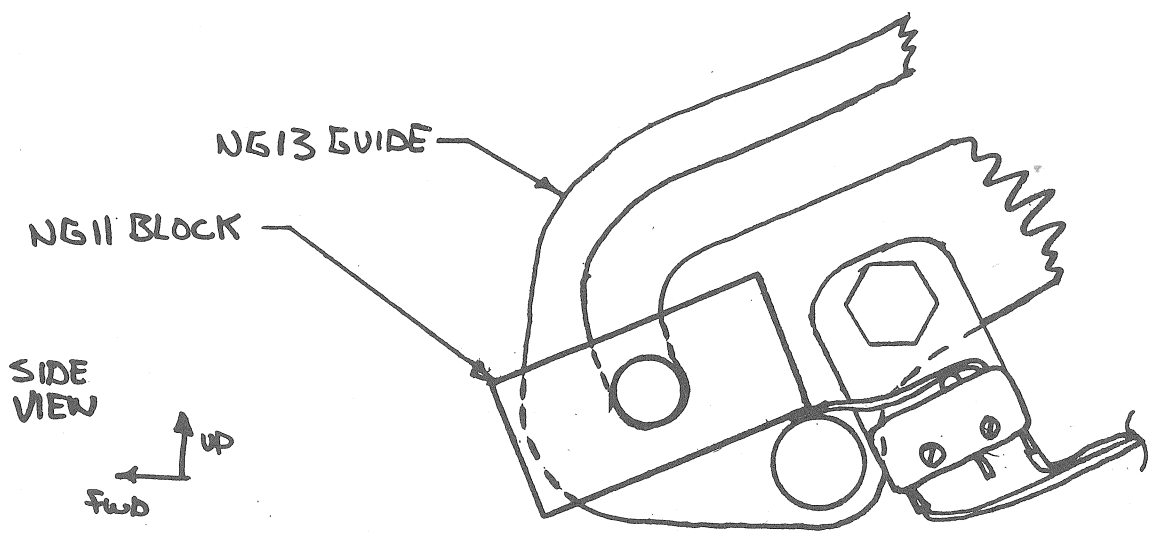

SWITCH MOUNTS TO A .025 ALUM BRACKET MOUNTED ON NG13. BEND SWITCH TAB SUCH THAT THE SWITCH IS ACTIVATED WHEN THE NOSE GEAR IS LOCKED FULLY DOWN. MOUNT SWITCH TO BRACKET WITH TWO #4-40 SCREWS/NUTS.

BATTERY INSTALLATION NO SCALE

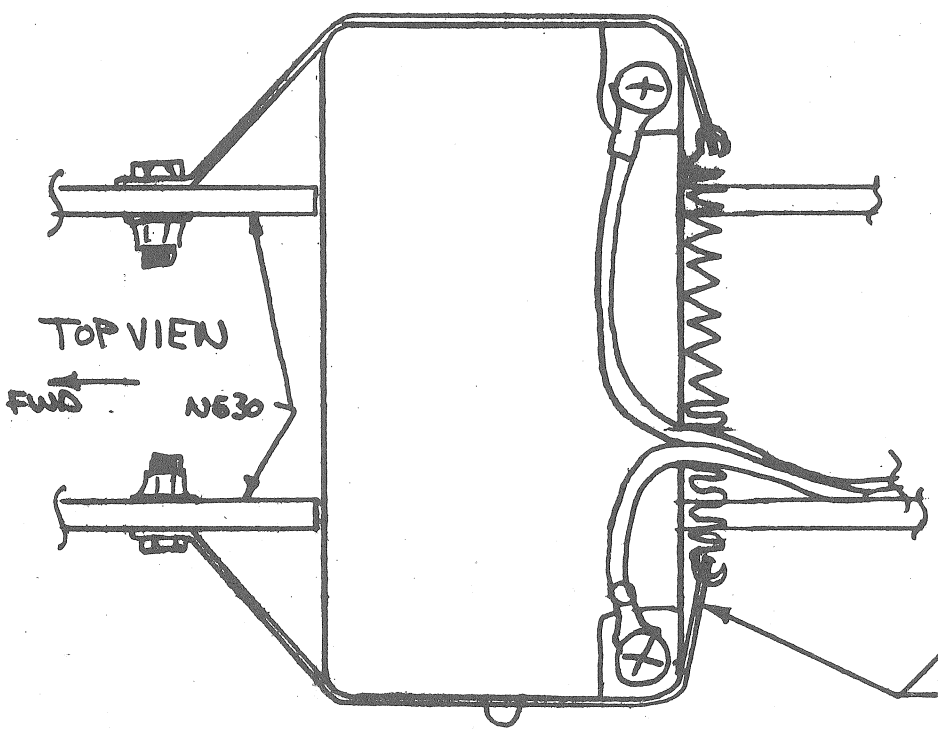

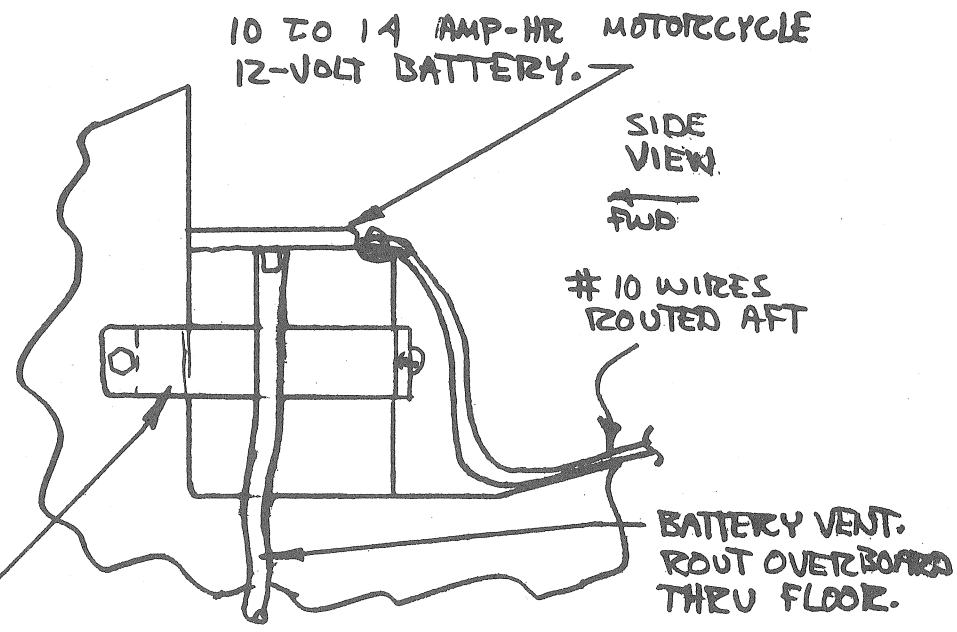

STRAP, 1" WIDE .025 ALUM. BEND TO FIT BATTERY AS SHOWN. MOUNT AT FRONT TO NG30 WITH AN3 BOLTS. TIE TOGETHER AT BACK WITH A SNUG SPRING.

STROBE LIGHT INSTALLATION. NOTE THAT WHILE THIS SYSTEM IS USED TO IMPROVE THE VISIBILITY OF THE AIRCRAFT DURING DAY VFR OPERATIONS, IT DOES COMPLY WITH THE NIGHT ANTI-COLLISION REQUIREMENTS (FAR 23.1401). NOTE THAT A FUSELAGE-MOUNTED SYSTEM IS USED, ARRANGED TO AVOID REFLECTIONS INTO THE COCKPIT. A WINGTIP SYSTEM IS NOT RECOMMENDED FOR TWO REASONS (1) WINGLET ATTACHMENT STRUCTURE LIMITS THE AVAILABLE ATTACHMENT POSITIONS. (2) ADDING MASS TO THE WINGTIP, PARTICULARLY AFT OF THE TORSION AXIS, WOULD REQUIRE FLIGHT FLUTTER QUALIFICATION.

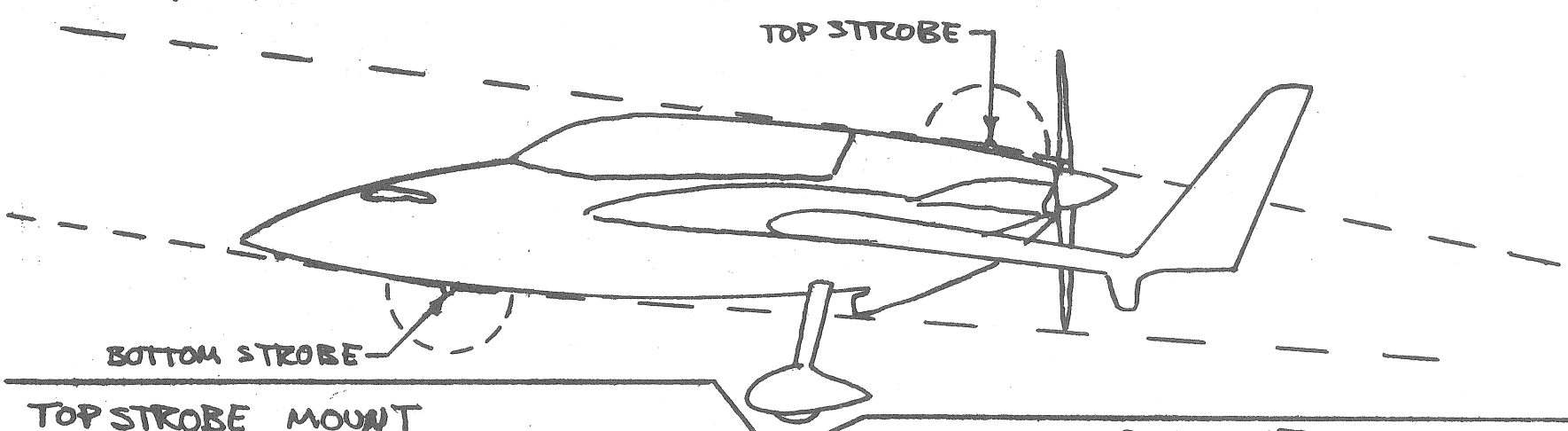

TOP STROBE MOUNT

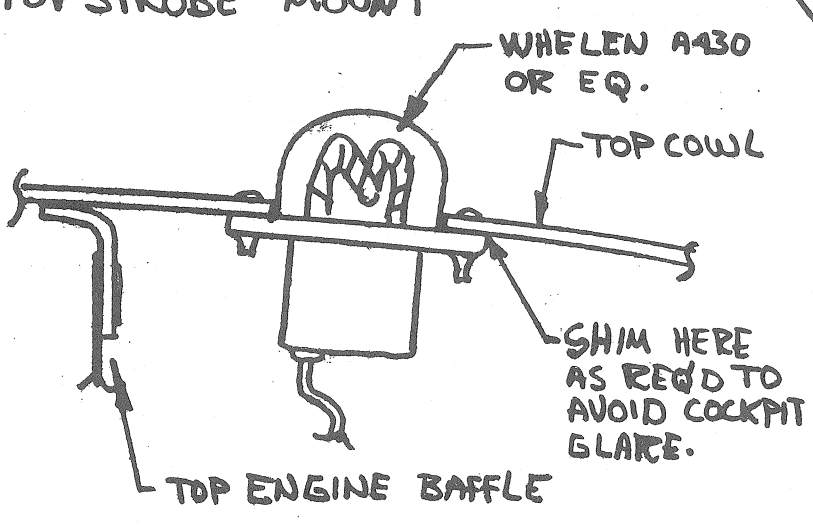

BOTTOM STROBE MOUNT

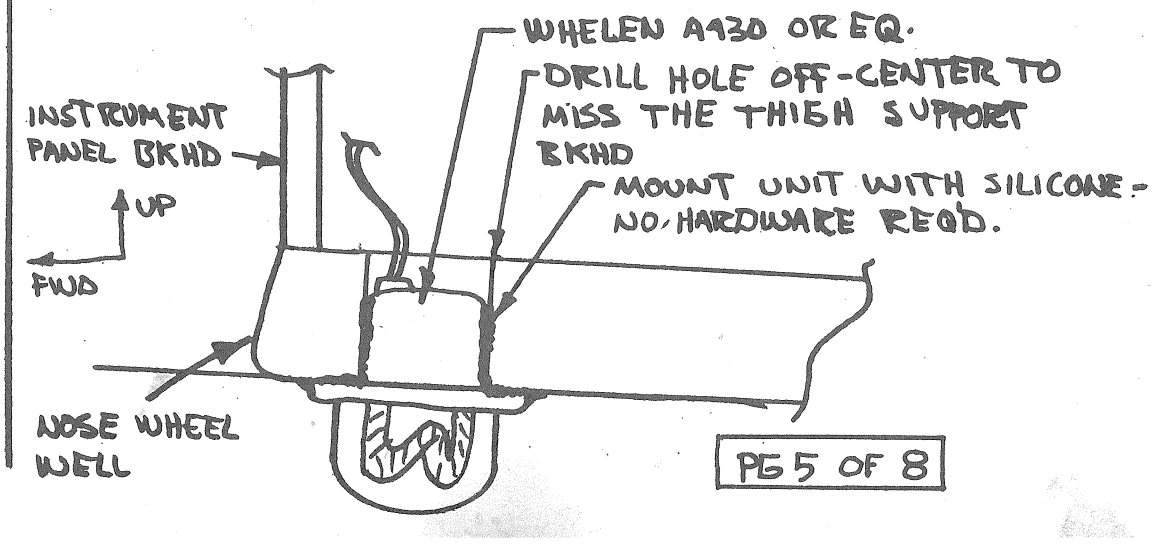

COM ANTENNA - INSTALLATION OF THE HC 200 VHF COM ANTENNA

REFER TO SECTION I, PAGE 22-9. THE COM ANTENNA IS INSTALLED ON THE INSIDE OF THE FRONT TOP FUSELAGE COVER. LOCATE THE APPROXIMATE CENTER OF THE PIECE. SLIT THE STRIP OF COPPER (SUPPLIED WITH THE ANTENNA) INTO FOUR EQUAL WIDTH STRIPS. REMOVE SOME FOAM IN THE CENTER OF THE COVER TO RECESS THE ANTENNA BLOCK, MOUNT THE BLOCK WITH 5-MIN. SOLDER THE TWO GROUND-PLANE LEADS TO THE FOUR COPPER STRIPS AS SHOWN. TACK THE STRIPS TO THE FOAM WITH 5-MIN, WITH THE STRIPS EXTENDING TO THE EXTREME CORNERS OF THE COVER.

LAYUP THE 1 PLY BID GLASS & INSTALL THE COVER AS SHOWN IN SECT I PG 22-9. TIE THE ANTENNA ELEMENT DOWN TO THE FLOOR ON THE SIDE OF THE NOSEWHEEL COVER NEAR THE INSTRUMENT PANEL WHERE IT WILL NOT GET KICKED DURING PILOT INGRESS.

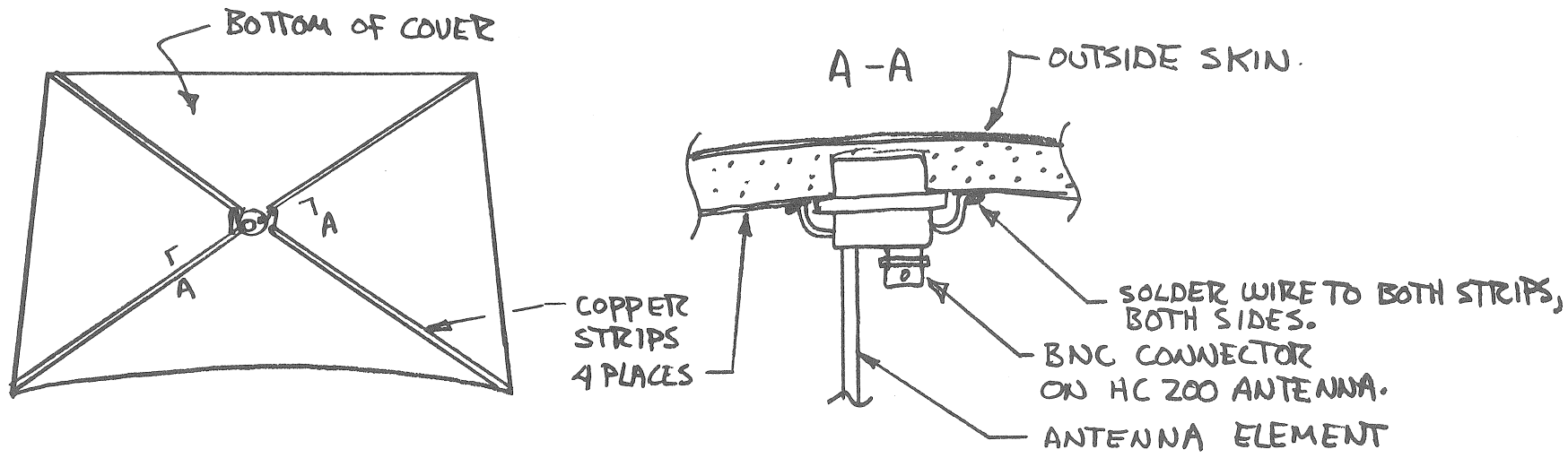

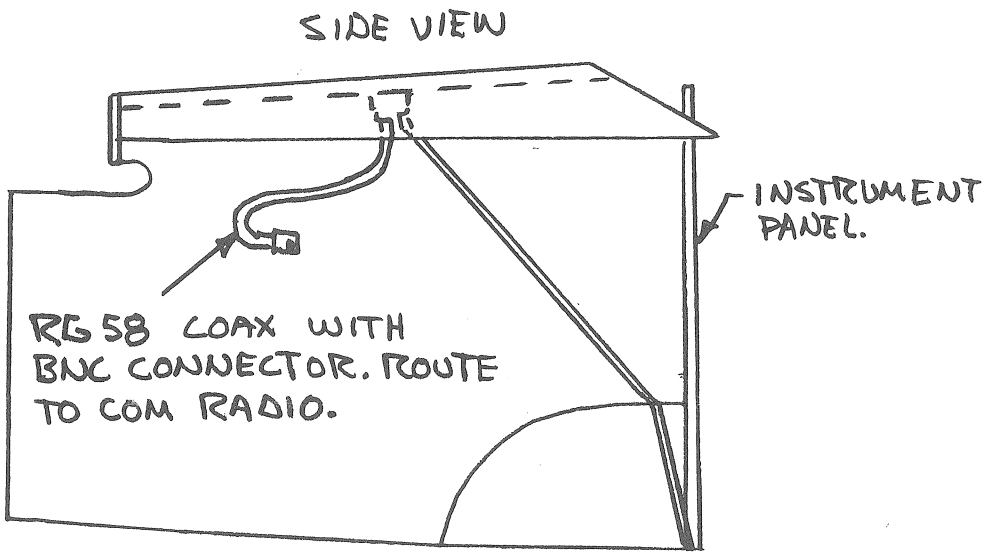

NAV ANTENNA - INSTALLATION OF THE HC100 VHF NAV (VOR) ANTENNA

REFER TO SECTION I, PAGE 23-1. THE NAV ANTENNA SHOULD BE INSTALLED BEFORE THE SIDE CONSOLES AND THIGH SUPPORTS. DRILL A HOLE IN THE FLOOR OF THE FRONT COCKPIT IMMEDIATELY AFT OF THE INSTRUMENT PANEL TO FIT THE ANTENNA BLOCK. THE HOLE SHOULD BE ABOUT 0.7" OFF-CENTER TO CLEAR THE THIGH SUPPORT RIB (SECT I, 23-2). BOND THE ANTENNA INTO THE HOLE WITH 5-MIN, ORIENTED SO THE BNC CONNECTOR CAN BE REACHED THRU THE HOLE IN THE INSTRUMENT PANEL, SINCE THIS AREA WILL LATER BE COVERED BY THE THIGH SUPPORT. ROUTE THE TWO ELEMENTS BACK & AFT AT A 45-degree ANGLE UNTIL THEY RUN INTO THE FUSELAGE SIDES. ROUTE THE EXCESS AFT ALONG THE FUSELAGE SIDES (OUTSIDE OF THE SEAT BELT ATTACHMENTS). BOND THE ELEMENTS IN PLACE WITH 5-MIN. CONNECT THE ANTENNA TO THE NAV RADIO WITH RG58 COAX AND BNC CONNECTORS.

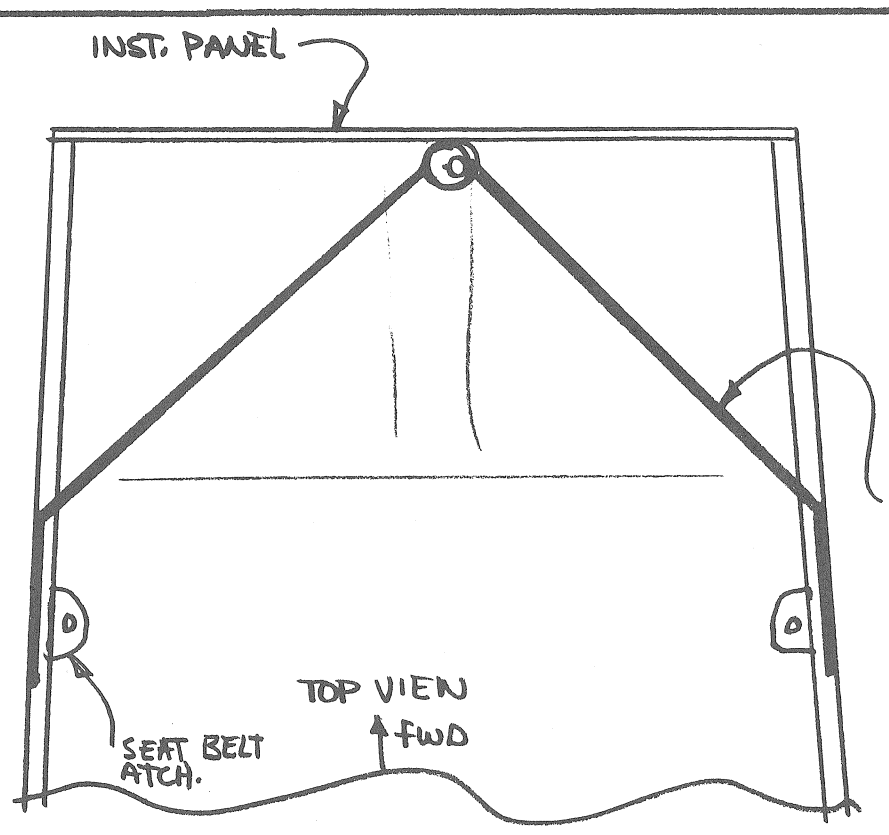

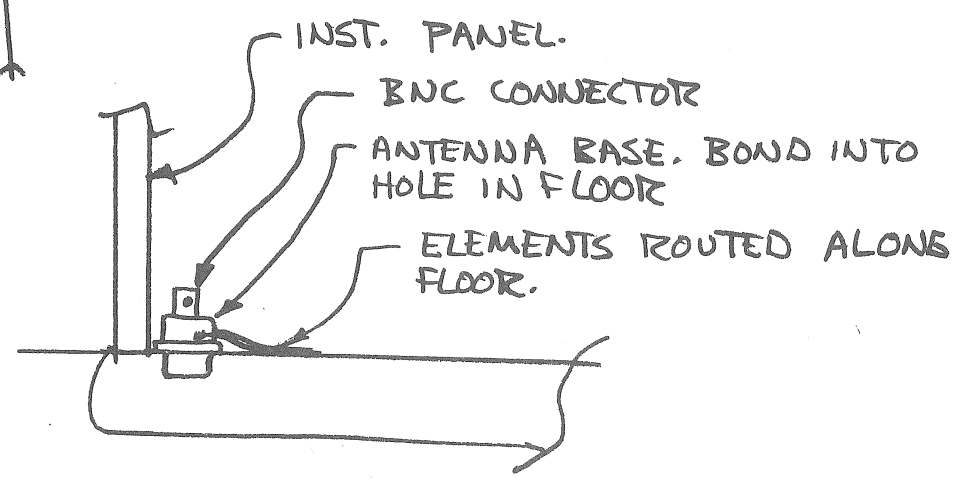

NIGHT LIGHTING EQUIPMENT (POSITION LIGHTS, LANDING LIGHTS & INSTRUMENT LIGHTS) ARE NOT RECOMMENDED FOR INSTALLATION IN THE VARIEZE DUE TO THE REASONS DISCUSSED IN NEWSLETTER NO 10. THE FOLLOWING INFORMATION IS SUPPLIED AS A GUIDE FOR THOSE WHO MAY STILL INSIST ON INSTALLING POSITION LIGHTS. IT HAS NOT BEEN INSTALLED ON A R.A.F. AIRPLANE, SO WE DO NOT KNOW HOW ADEQUATE IT WILL PERFORM NOR HOW WELL THE INSTALLATION WILL FIT. DUE TO THE UNUSUAL CONFIGURATION OF THE AIRCRAFT IT IS RECOMMENDED THAT YOU CHECK WITH YOUR LOCAL FAA ENGINEERING OFFICE. THERE HAS BEEN A DIFFERING OF OPINION ON THE LEGAL POSITION OF THE RED & GREEN POSITION LIGHTS. TWO POSITIONS ARE SHOWN BELOW. BE SURE THE ONE YOU CHOOSE WILL BE ACCEPTED BY YOUR LOCAL FAA.

AGAIN, WE DO NOT RECOMMEND THIS INSTALLATION. THIS MATERIAL IS ONLY OUR OPINION OF HOW WE THINK IT MAY BE INSTALLED. YOU WILL NO DOUBT HAVE TO WORK OUT INSTALLATION DETAILS.

WHITE POSITION LIGHT

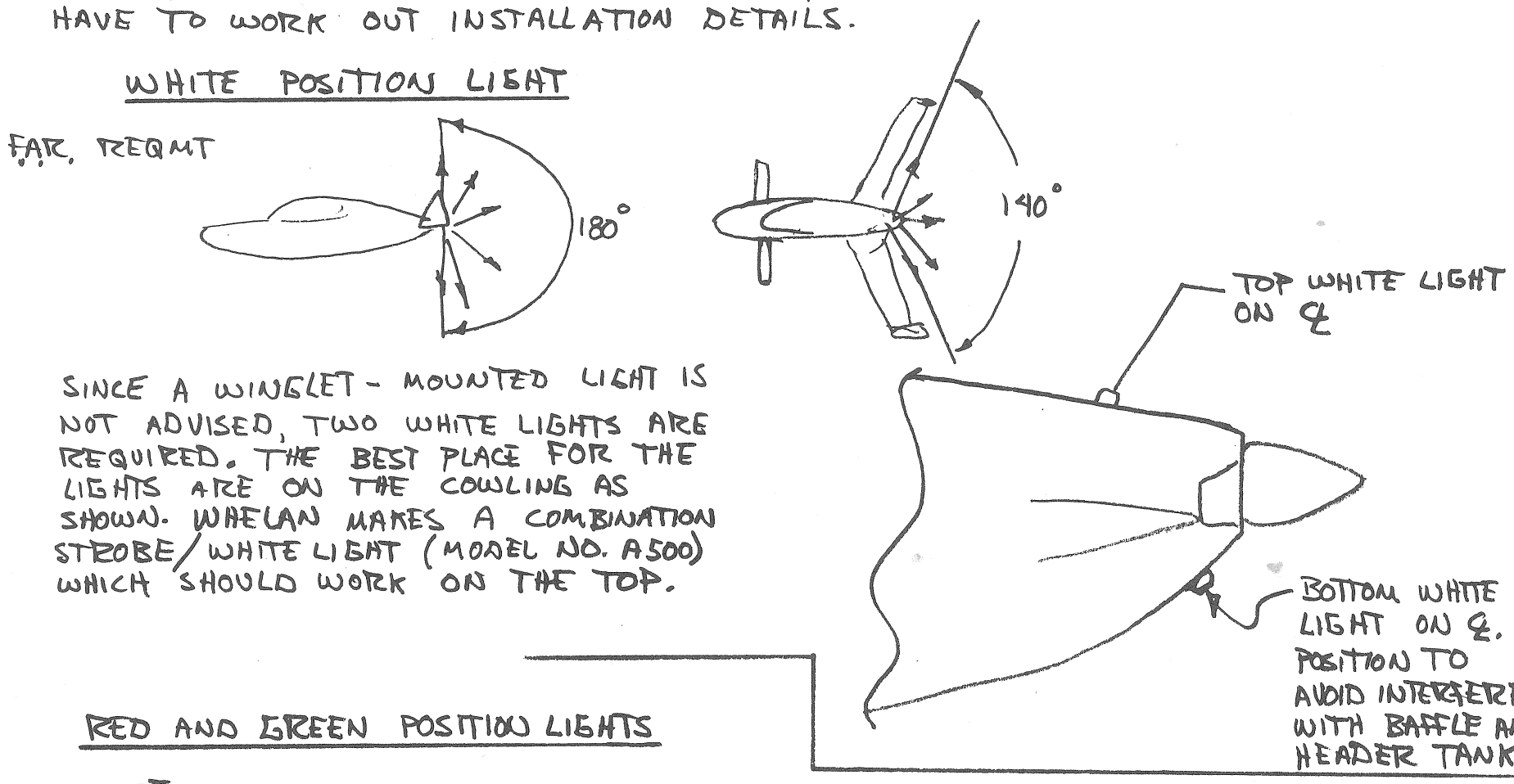

SINCE A WINGLET - MOUNTED LIGHT IS NOT ADVISED, TWO WHITE LIGHTS ARE REQUIRED. THE BEST PLACE FOR THE LIGHTS ARE ON THE COWLING AS SHOWN. WHELAN MAKES A COMBINATION STROBE/WHITE LIGHT (MODEL NO. A500) WHICH SHOULD WORK ON THE TOP.

RED AND GREEN POSITION LIGHTS

1ST OPTION - CANARD TIPS

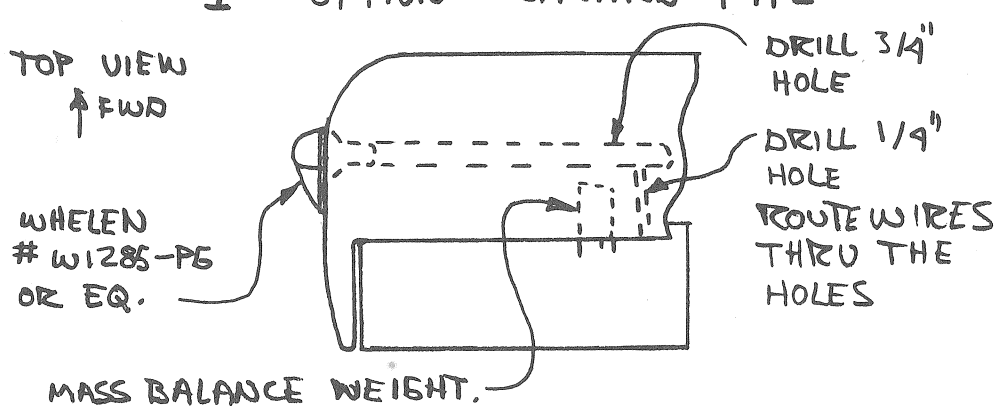

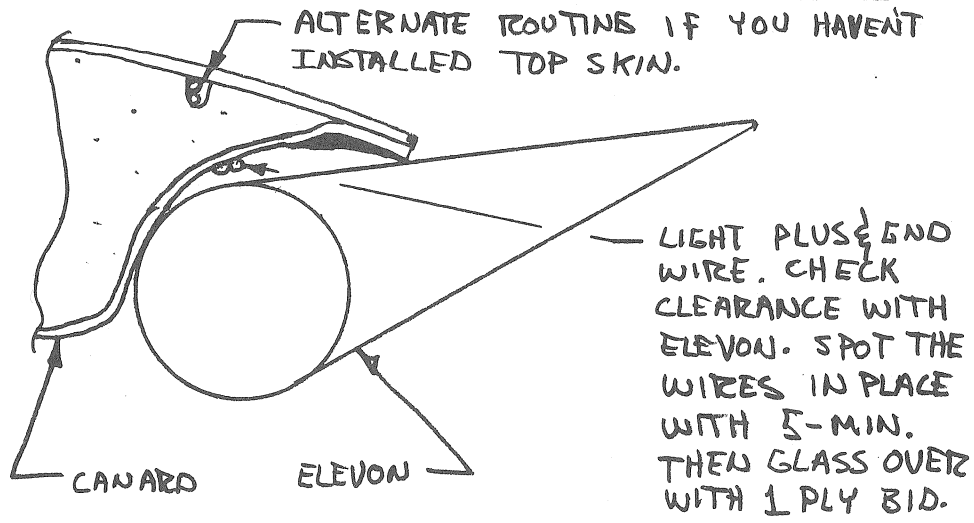

2ND OPTION - WING TIPS. THIS IS THE ONLY POSITION ON THE WINGTIP THAT DOESN'T LOWER WING TORSIONAL FREQUENCY.

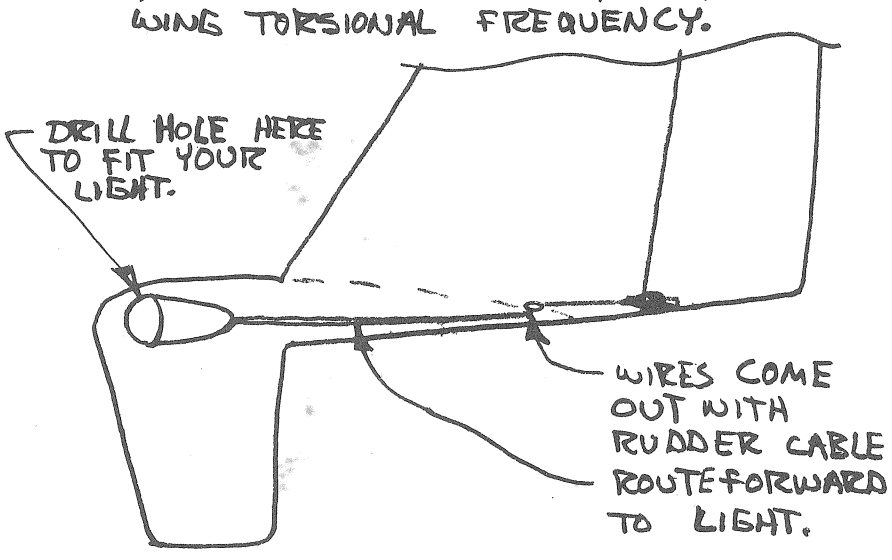

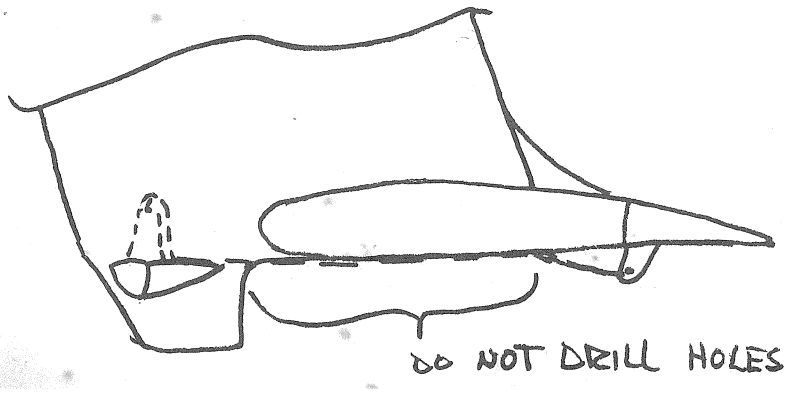

SCHEMATIC - POSITION LIGHTS

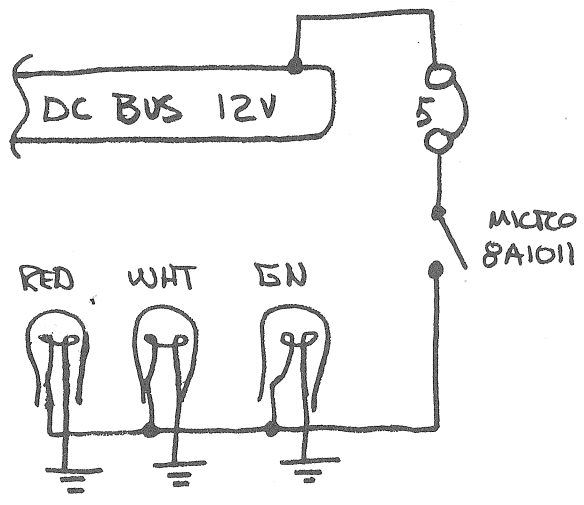

LANDING LIGHT

DO NOT CUT INTO THE SURFACE OF WINGS. THE LANDING LIGHT CAN BE A RETRACTABLE TYPE MOUNTED UNDER THE PILOTS THIGH SUPPORT ON THE FUSELAGE BOTTOM, OR THE NOSE-MOUNTED SYSTEM SKETCHED BELOW. THE NOSE SYSTEM IS SIMILAR TO OUR VARI/EZEN INSTALLATION.

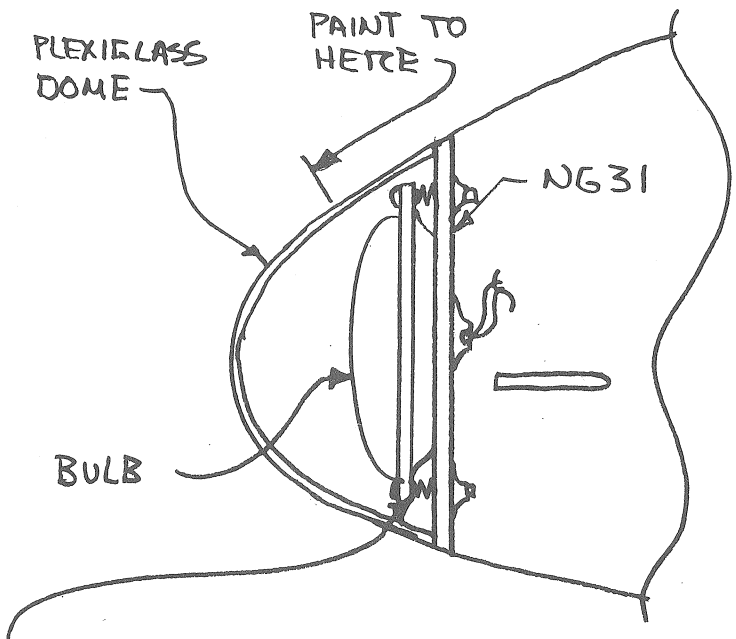

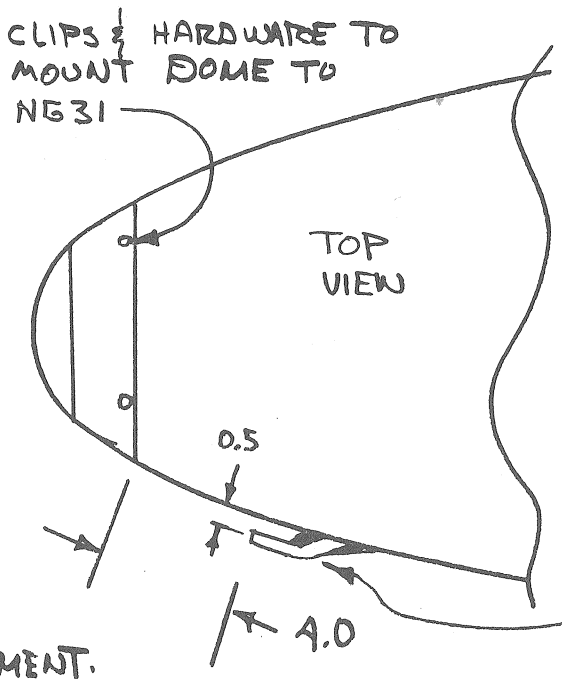

THE BULB IS A SEALED-BEAM 100-WATT UNIT FROM A CESSNA OR FROM A MOTORCYCLE. (GE # 4509 LAMP).

SPRINGS & #10 HARDWARE TO ALLOW ADJUSTMENT.

FORMING METHOD FOR PLEXIGLASS DOME.

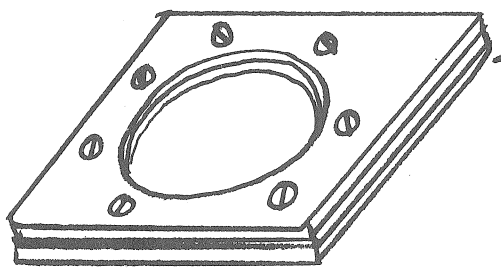

0.1" THICK PLEXIGLASS SANDWICHED BETWEEN TWO 1/4" PLYWOOD FRAMES

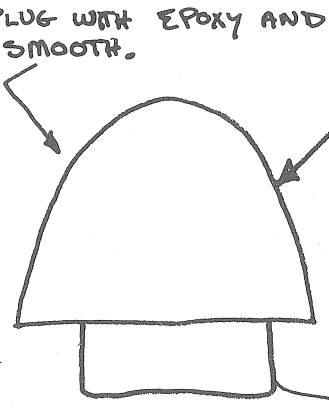

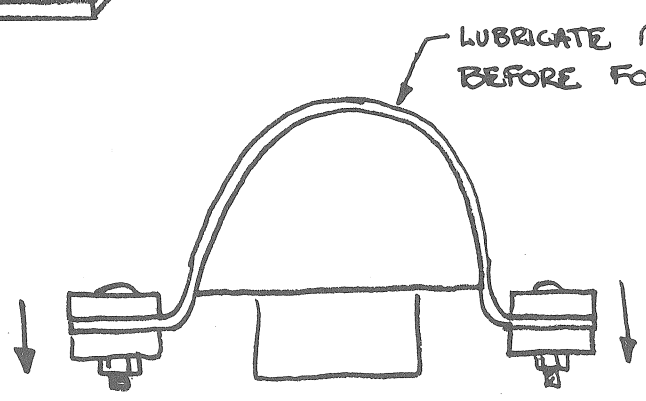

PLEXIGLASS & FRAME ARE HEATED TO 400° IN AN OVEN, THEN THE FRAME IS FORCED DOWN OVER THE MOLD & ALLOWED TO COOL.

SCHEMATIC FOR LANDING LITE →

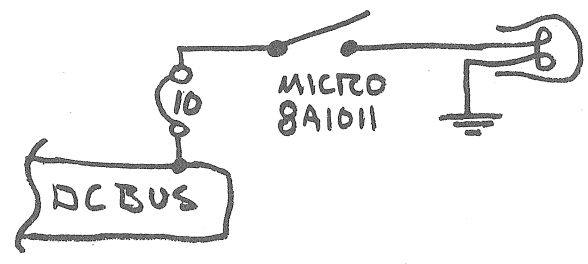

ENGINE STARTER

AN ELECTRIC START SYSTEM IS NOT RECOMMENDED FOR INSTALLATION IN THE VARIEZE. TOTAL WEIGHT ADDITION, INCLUDING STARTER, HEAVY WIRING, LARGER BATTERY, ETC, IS ABOUT 40 LB. DUE TO THE SMALL SIZE/LOW WING AREA THE VARIEZE IS NOT AS TOLERANT OF WEIGHT INCREASES AS THE AVERAGE LIGHT AIRCRAFT AND A 40-LB INCREASE IS UNSATISFACTORY. THE USE OF THE STARTER AND ALTERNATOR IS ONLY POSSIBLE ON THE C-85 ENGINES (SEE SECTION IIA). HAND-STARTING A VARIEZE IS CONSIDERABLY SAFER & EASIER THAN HAND-STARTING A CESSNA 150 (SEE OWNERS MANUAL).
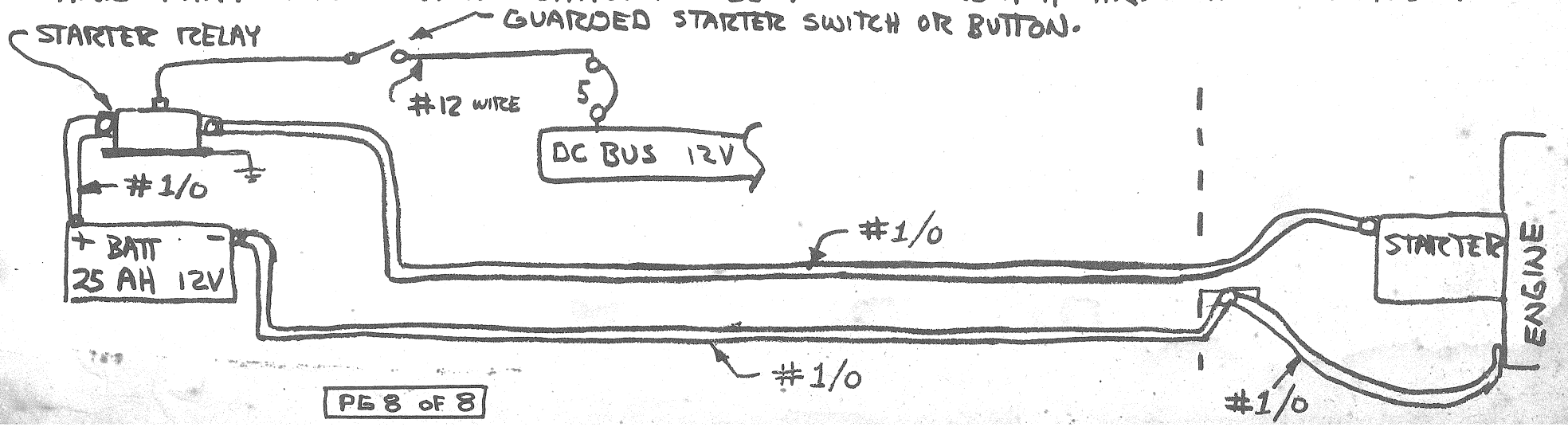
WE HAVE HAD SEVERAL REQUESTS FOR STARTER ELECTRICAL INSTALLATION DETAILS FROM THOSE WHO INSIST ON A STARTER EVEN THO IT COMPROMISES THE AIRCRAFT. THE FOLLOWING IS FOR THEM, SHOWING CHANGES & ADDITIONS TO THE BASIC ELECTRICAL SYSTEM TO ALLOW FOR THE STARTER SYSTEM. NOTE THAT THE GROUND WIRES WHICH WERE #10 WIRE MUST NOW BE THE VERY HEAVY #1/0 WIRE TO AVOID EXCESSIVE VOLTAGE DROP OVER THE 12-FOOT LONG STARTER CIRCUIT AND THAT THE MINIMUM BATTERY SIZE IS NOW 25 AMP-HR. STARTER RELAY CAN BE AUTOMOTIVE.